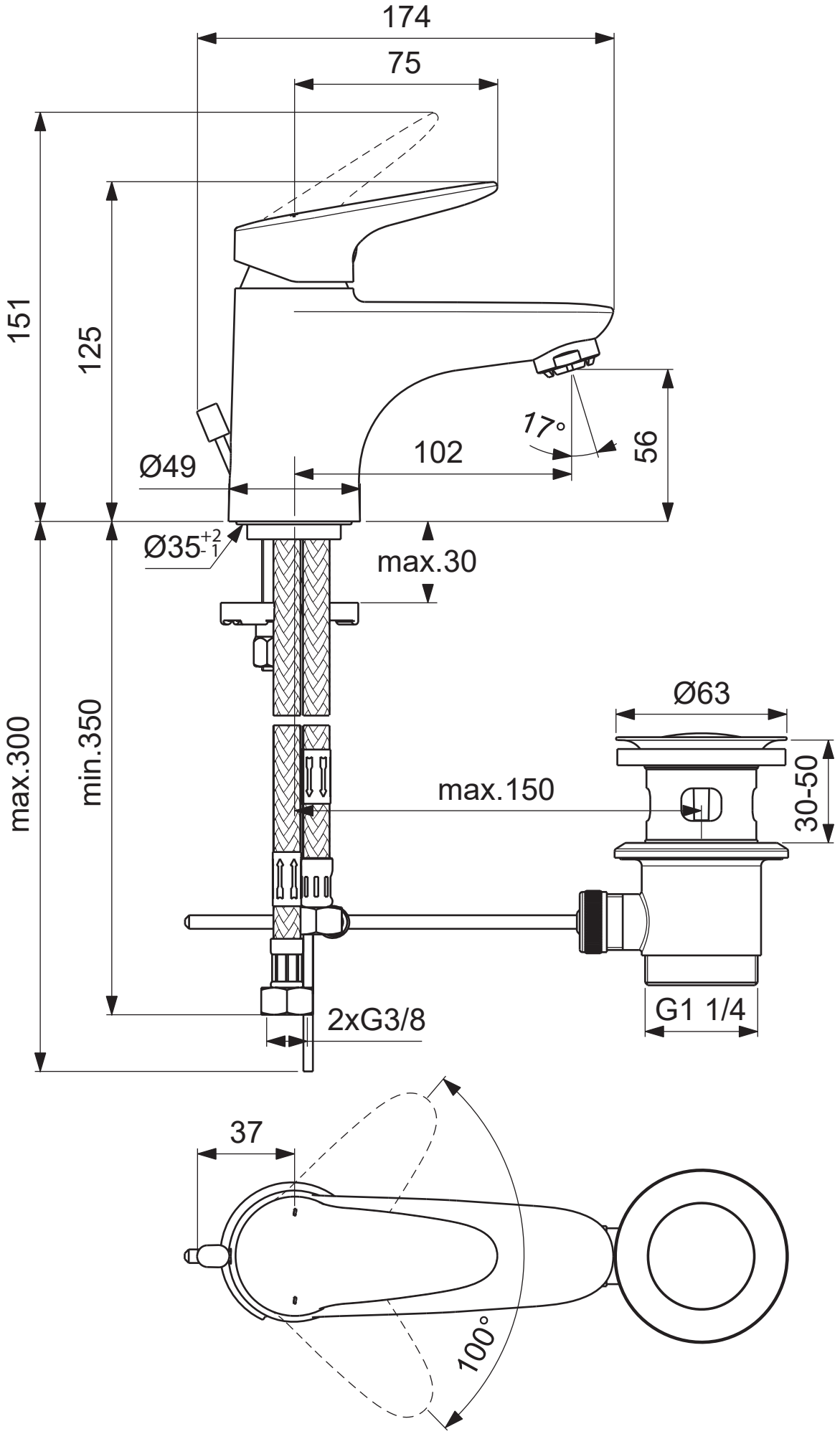
174
75
151
125
17°
56
102
Ø49
Ø35+2 -1
max.30
max.300
min.350
Ø63
max.150
30-50
2xG3/8
G1 1/4
37
100°